Mounting: NV.. linear actuator on H.. globe valve

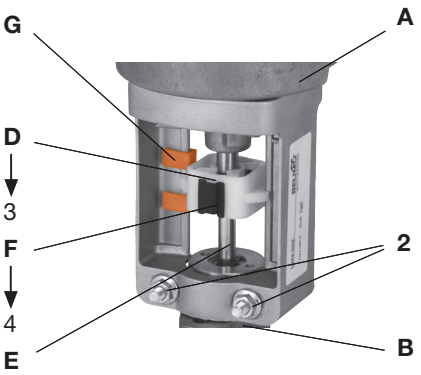

The neck of the valve (B) must be cleaned before the linear actuator (A) is fitted onto it.

Care must be taken to ensure that the bracket, which is an integral part of the linear actuator, is pushed down until it is in firm contact with the neck of the valve. The bracket must then be secured firmly to the neck of the valve by tightening the two fixing nuts (2) (with a torque of at least 10 Nm) with a 10 mm open-jaw or ring spanner. Next, use the manual operating mechanism to move the position indicator (D) to the position (3) of the valve stem (E) and latch it there.

The black locking device (F) is then pushed down so that it is flush with the position indicator (4). The stem coupling is now secured and cannot unlatch accidentally.

The followers (G) are automatically moved to the maximum traveled stroke by the position indicator.

When dismantling, first release the fixing nuts of the bracket. Then move the stem coupling to the middle of the stroke with the manual operating mechanism. Next, push the locking device (black sliding part) up. The actuator can now be detached from the spindle by pressing in the meanwhile released pushbuttons on the stem coupling.

Manual operation of the NV.. linear actuator

When a linear actuator is supplied separately but together with a valve, the actuator spindle is extended to approximately the 3/4 position. The spindle can be operated with a hexagonal key (the 5 mm or 3/16" hexagonal key is not included with the actuator).
The manual operating mechanism is overload-proof. The actuator spindle remains in the manual setting either until its power supply is energized or until it moves to whichever end stroke position has been selected the next time the power supply is interrupted.

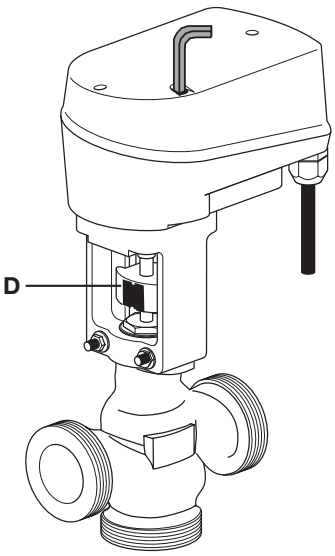

Manual operation of:
- NV24-3
- NV230-3
- NV24-MFT
- NVY24-MFT
- NVG24-MFT

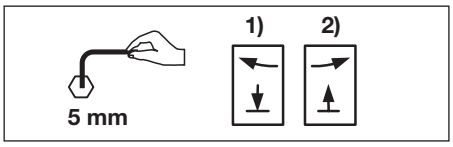

Turning the hexagonal key clockwise 1) causes the actuator spindle to extend; turning it counterclockwise 2) causes it to retract.

Manual operation of NVF24-MFT

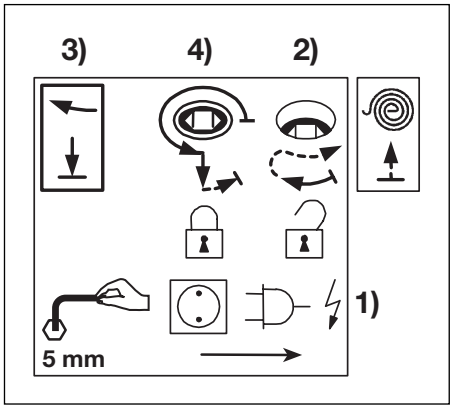

1) Isolate the actuator from the power supply!

2) Disengaging manual operation of the NVF24-MFT.
Turn the hexagonal key clockwise approximately 45° until resistance is encountered. Then lift the key (approx. 7 mm) until the black socket provided for it is level with the top of the housing cover. The spring mechanism now rotates the key counterclockwise and the actuator spindle retracts.

3) Manual operation of the NVF24-MFT.
Turning the hexagonal key clockwise causes the actuator spindle to extend; it must be held in the required stroke position.

4) Locking manual operation of the NVF24-MFT.
Turn the hexagonal key back 3/4 of a turn counterclockwise and then press it down into the cover of the housing (the black socket moves inwards approximately 7 mm). Slight counterclockwise rotation of the key then locks the manual operating mechanism in position.

Manual operation of NVF24-MFT-E

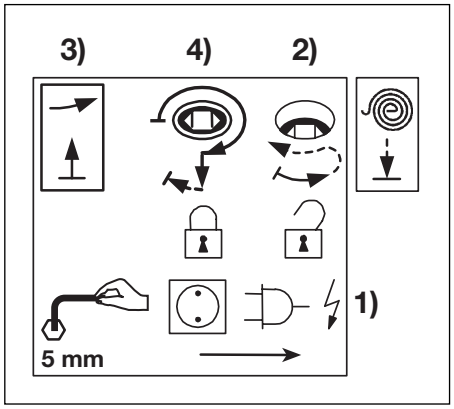

1) Isolate the actuator from the power supply!

2) Disengaging manual operation of the NVF24-MFT-E.
Turn the hexagonal key counterclockwise approximately 45° until resistance is encountered. Then lift the key (approx. 7 mm) until the black socket provided for it is level with the top of the housing cover. The spring mechanism now rotates the key clockwise. The actuator spindle extends fully, the position indicator (D) moves down and the valve can be coupled.

3) Manual operation of the NVF24-MFT-E. Turning the hexagonal key counterclockwise causes the actuator spindle to retract; it must be held in the required stroke position.

4) Locking manual operation of the NVF24-MFT-E.
Turn the hexagonal key back 3/4 of a turn clockwise and then press it down into the cover of the housing (the black socket moves inwards approximately 7 mm). Slight clockwise rotation of the key then locks the manual operating mechanism in position.

6.H-5 • en • 05.2004 • PDF • Subject to technical modifications

Assembled unit, NV.. with H4..B / H5..B, DN 15 to 50

Globe valve with external thread

DN	External thread	Dimensions [mm]		2-way			3-way		
				B1	Weight		B	Weight	
[mm]	G	L	H	[mm]	[kg]*	[kg]**	[mm]	[kg]*	[kg]**
15	G1 1/8”	80	46	65	2.7	3	55	2.6	2.9
20	G1 1/4”	90	46	65	2.8	3.1	55	2.7	3
25	G1 1/2”	110	52	66	3.1	3.4	55	2.9	3.2
32	G2”	120	56	67	3.7	4	55	3.5	3.8
40	G2 1/4”	130	65	72	4.3	4.6	60	4	4.3
50	G2 3/4”	150	65	75	5.4	5.7	65	5	5.3

* Weight includes NV.. linear actuator
** Weight includes NVF.. linear actuator

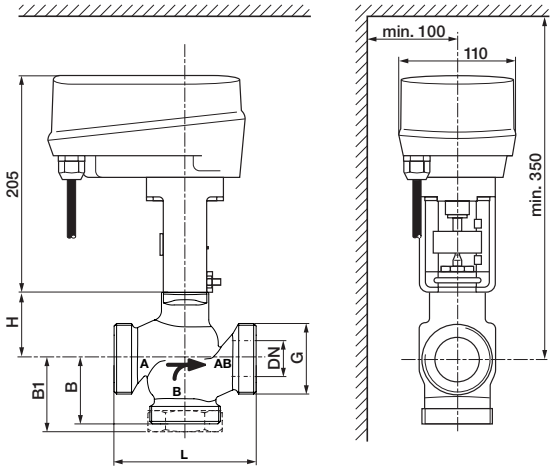

Accessories

Pipe connector for H4..B and H5..B valves with external thread

Type	ZR4515	ZR4520	ZR4525	ZR4532	ZR4540	ZR4550
DN [mm]	15	20	25	32	40	50
G	1 1/8”	1 1/4”	1 1/2”	2”	2 1/4”	2 3/4”
Rp	1/2”	3/4”	1”	1 1/4”	1 1/2”	2”
Weight [kg]	0.14	0.18	0.22	0.32	0.46	0.66
L approx. [mm]	23	25	28	32	34	37

Included in scope of delivery of ZR45..: Union nut* (G thread), female part* (Rp thread), flat gasket (IT)
* Material: Malleable cast iron, galvanized

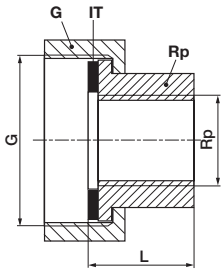

Assembled unit, NV.. with H6..N / H7..N, DN 15 to 80

Globe valve with flanged ends

DN	Dimensions [mm]						2-way			3-way		
							B1	Weight		B	Weight	
[mm]	L	H	D	K	d	C	[mm]	[kg]*	[kg]**	[mm]	[kg]*	[kg]**
15	130	46	95	65	4x14	14	81	6.3	6.6	65	4.3	4.6
20	150	46	105	75	4x14	16	88	6.5	6.8	70	5.2	5.5
25	160	52	115	85	4x14	16	93	7.8	8.1	75	6.2	6.5
32	180	56	140	100	4x18	18	113	11.1	11.4	95	8.7	9
40	200	64	150	110	4x18	18	118	13.4	13.7	100	10.7	11
50	230	64	165	125	4x18	20	120	17.4	17.7	100	13.7	14
65[1)]	290	100	185	145	4x18	20	140	25.3	25.6	120	20.5	20.8
80[2)]	310	110	200	160	8x18	22	152	31.7	32	130	25.5	25.8

* Weight includes NV.. linear actuator
** Weight includes NVF.. linear actuator
[1)] Type H664N/H764N
[2)] Type H679N/H779N

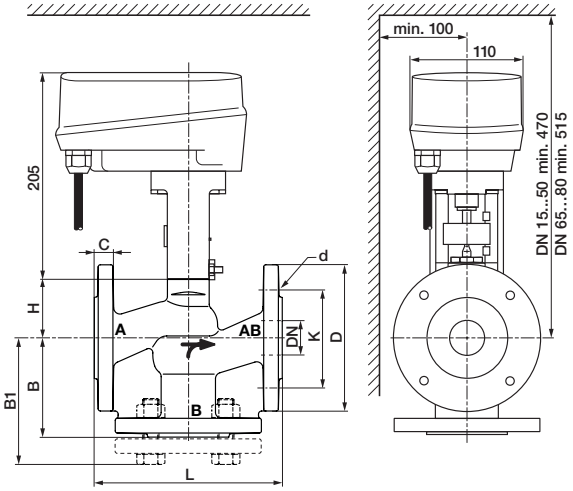

Assembled unit, NV.. with H6..S, DN 15 to 65

Globe valve with flanged ends

DN	Dimensions [mm]						Weight	
[mm]	L	H	D	K	d	C	[kg]*	[kg]**
15	130	118	95	65	4x14	14	5.1	5.4
20	150	118	105	75	4x14	16	5.8	6.1
25	160	126	115	85	4x14	16	6.7	7
32	180	126	140	100	4x18	18	8.3	9.8
40	200	133	150	110	4x18	18	10.2	10.5
50	230	139	165	125	4x18	20	13.1	13.4
65[3)]	290	100	185	145	4x18	20	18.2	18.5
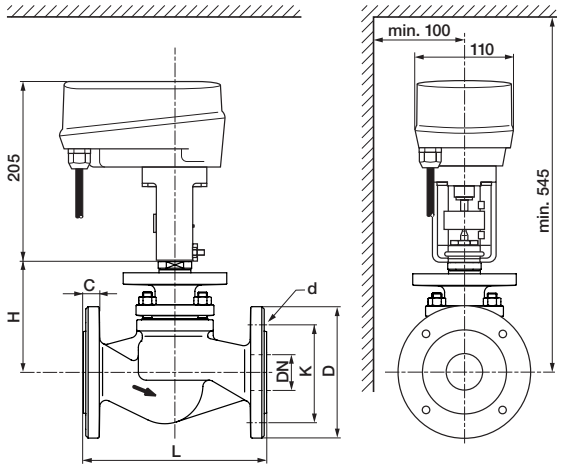
* Weight includes NV.. linear actuator
** Weight includes NVF.. linear actuator
[3)] Type H664S